| | |
|---|---|
| Project Name | |
| Project # | |
| Model # | |
| Type | |

# FFL-U036-ET7068 LED Series

## FEATURES & SPECIFICATIONS

This model is specially designed for medium power of COB LED, compact and widely applied, two kinds of watts for option.

Die casting aluminum housing and optimized heat dissipation structure ensure longer lifetime and better stability. Precise lighting distribution, various lighting beam angles make it applied in different places and projects. 360°horizontal rotate and 180°vertical adjust.

Applied in different outdoor areas, such as architectures, buildings, lawn, garden and etc...

### Specifications

| | |
|---|---|
| **Housing** | Die-cast aluminum |
| **Gasket** | Silicone rubber |
| **Front Cover** | Tempered Glass |
| **LED Optic** | Polycarbonate Lens |
| **Surface Finish** | AkzoNobel powder coating |
| **Driver Type** | Constant current |
| **Input Voltage** | 120V/AC |
| **Ambient Temperature** | -20°C~45°C |
| **CCT** | 3000K _4000K _5000K |
| **Beam Angle** | 24°/40°/60° |
| **LED Lumens** | 3000K -1760lm 3000K - 2112lm 3000K - 2640lm<br>20W 4000K -1832lm 24W 4000K - 2196lm 30W 4000K - 2743lm<br>5000K -1884lm 5000K - 2260lm 5000K - 2824lm |
| **Ingress Protection** | IP65 |
| **Certifications** | Intertek |

### Dimensions

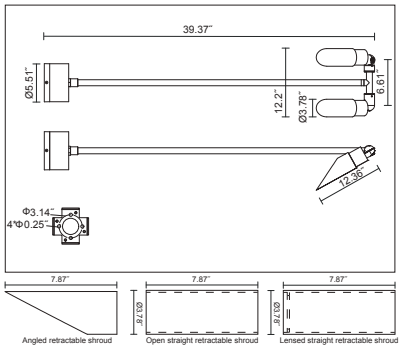


### Options and Accessories

**Shroud**

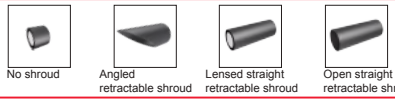

No shroud | Angled retractable shroud | Lensed straight retractable shroud | Open straight retractable shroud

**Housing Color**

Black RAL9011 | White RAL9016 | Gray RAL7012 | Mineral bronze | Silver

Horizontal spread H55°xV20° | Vertical spread H20°xV55° | Honeycomb Louver

## ORDERING INFORMATION

EX: FFL-U036-ET7068-024-UNV-40K-NS-B

| Series | Wattage (Lumens) | Input Voltage | Temperature | Shroud | Finish | Accessories |
|---|---|---|---|---|---|---|
| 1a. FFL-U036-ET7068 | 2a. 020 (2 x 10W; 1,880lm) | 3a. USV | 4a. 30K (3000K) | 5a. NS | 6a.B | 7a. H (Honey Comb Louver) |
| | 2b. 024 (2 x 12W; 2,260lm) | | 4b. 40K (4000K) | 5b. AS | 6b. W | 7b.M (Marine Ambient) |
| | 2c. 030 (2 x 15W; 2,800lm) | | 4c. 50K (5000K) | 5c. OS | 6c. G | |
| | | | | 5a. LS | 6d. Z | |
| | | | | | 6e. S | |

Notes:

*If you do not see an option you would like please inquire directly and we will work to accommodate your needs.*

3a. 120V/AC

5a. **NS:** No shroud
5b. **AS:** Angled retractable shroud
5c. **OS:** Open straight retractable shroud
5d. **LS:** Lensed straight retractable shroud

6a. **B:** Black RAL9011
6b. **W:** White RAL9016
6c. **G:** Gray RAL7012
6d. **Z** Mineral Bronze
6e. **S** Silver

*All of the products and specifications can change without prior notice*

*Please note this specification sheet is considered to be business promotional material and not used for product listing identification purposes*

1834 NW 21st STREET MIAMI, FL 33142 | PHONE – 786.420.3600 | FAX – 786.420.3602 | SPECTRASOL-US.COM